Changes for the Better

MITSUBISHI ELECTRIC

SPLIT-TYPE, HEAT PUMP AIR CONDITIONERS

July 2013

No.OCB527
REVISED EDITION-A

PARTS CATALOG R410A

Outdoor unit [Model name]	[Service Ref.]
PUHZ-ZRP35VKA	PUHZ-ZRP35VKA
PUHZ-ZRP50VKA	PUHZ-ZRP50VKA
PUHZ-ZRP60VHA	PUHZ-ZRP60VHA
PUHZ-ZRP71VHA	PUHZ-ZRP71VHA
PUHZ-ZRP100VKA	PUHZ-ZRP100VKA
PUHZ-ZRP125VKA	PUHZ-ZRP125VKA
PUHZ-ZRP140VKA	PUHZ-ZRP140VKA
PUHZ-ZRP100YKA	PUHZ-ZRP100YKA
	PUHZ-ZRP100YKAR1
PUHZ-ZRP125YKA	PUHZ-ZRP125YKA
	PUHZ-ZRP125YKAR1
PUHZ-ZRP140YKA	PUHZ-ZRP140YKA
	PUHZ-ZRP140YKAR1

Revision:
- PUHZ-ZRP100/125/140YKAR1 have been added in REVISED EDITION-A.
- Some descriptions have been modified.

- Please void OCB527.

Note:
- RoHS compliant products have <G> mark on the spec name plate.

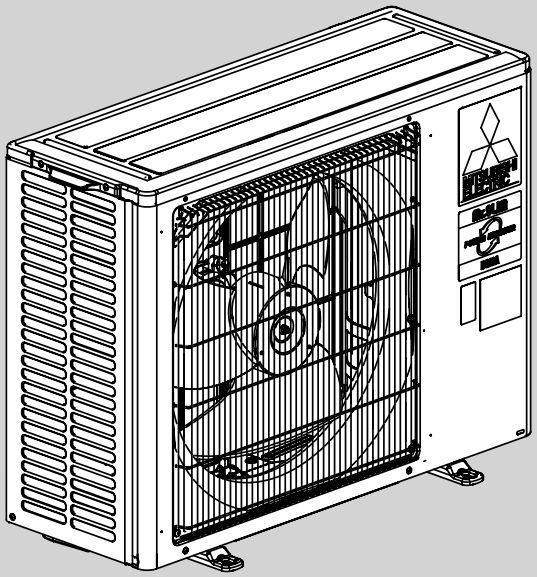

PUHZ-ZRP35VKA
PUHZ-ZRP50VKA

CONTENTS

1. RoHS PARTS LIST ····· 2

SERVICE MANUAL (OCH527)

Mr.SLIM™

1 RoHS PARTS LIST

FUNCTIONAL AND ELECTRICAL PARTS
PUHZ-ZRP35VKA
PUHZ-ZRP50VKA

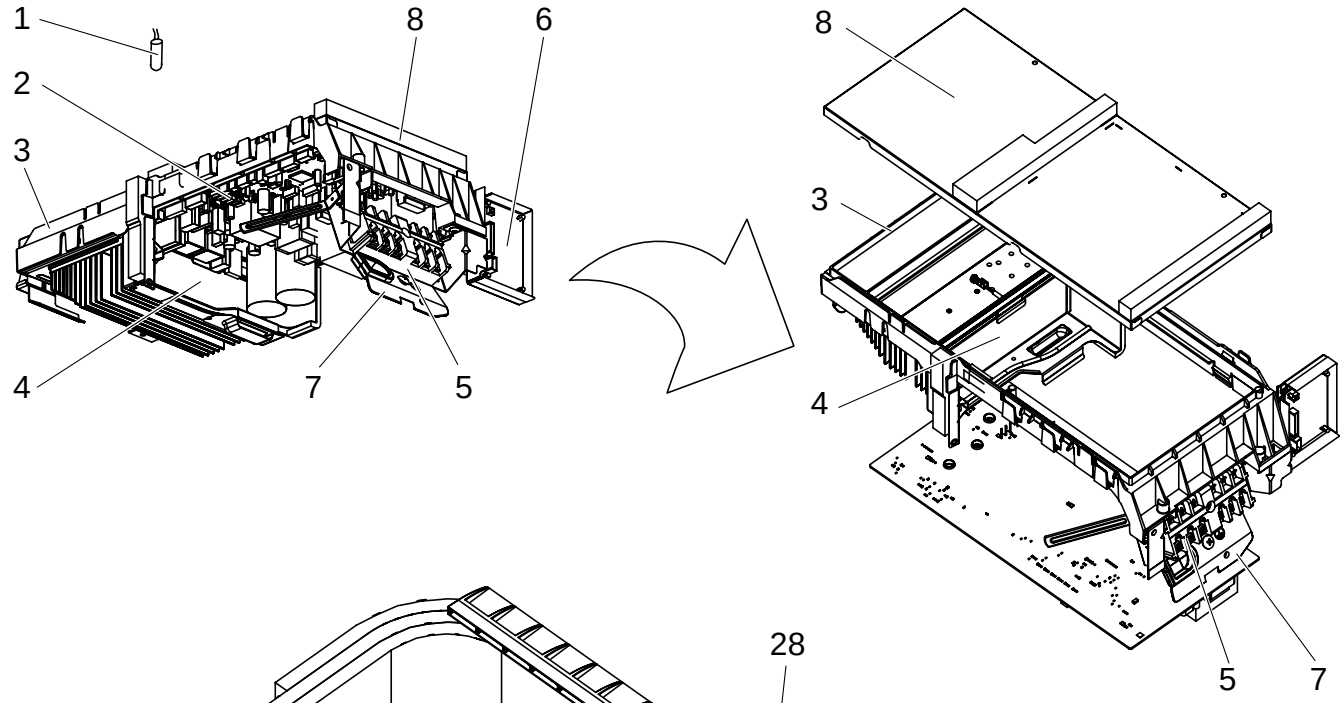

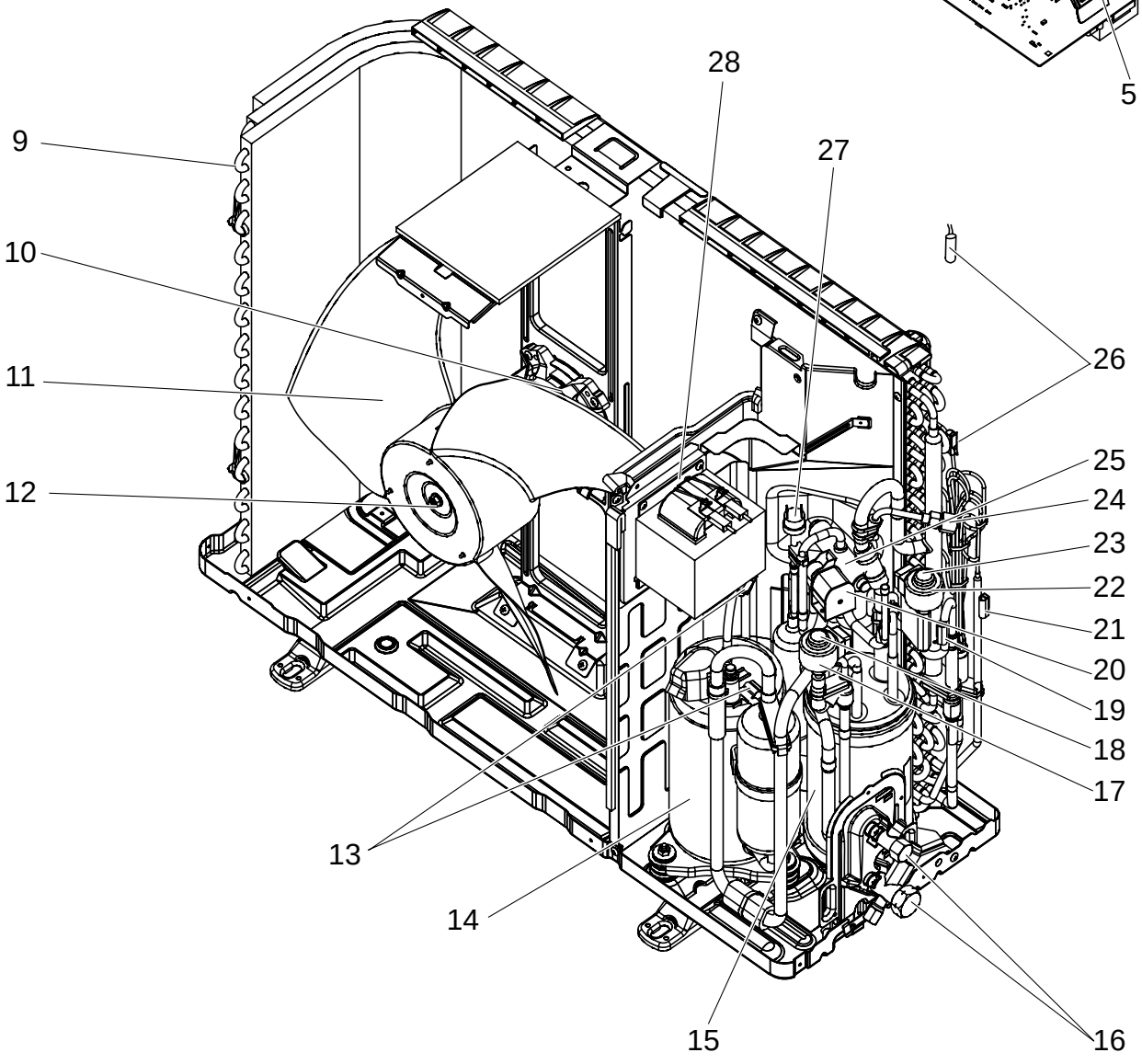

RoHS PARTS LIST

Part numbers that are circled are not shown in the figure.

No.	RoHS	Part No.	Part Name	Specification	Q'ty/unit		Remarks (Drawing No.)	Wiring Diagram Symbol
					PUHZ-ZRP·VKA			
					35	50		
1	G	R01 H81 202	THERMISTOR (HEATSINK)		1	1		TH8
2	G	T7W F25 315	CONTROLLER BOARD		1	1		C.B.
3	G	R01 E00 327	P.B. SUPPORT		1	1		
4	G	R01 E01 327	H.S. SUPPORT		1	1		
5	G	T7W E28 716	TERMINAL BLOCK	6P (L,N,⏚,S1,S2,S3)	1	1		TB1
6	G	R01 E00 316	SWITCH BOARD		1	1		S.B.
7	G	—	T.B. SUPPORT		1	1	(BK00L098G07)	
8	G	R01 E00 325	P.B. COVER		1	1		
9	G	T7W E71 408	HEAT EXCHANGER		1			
	G	R01 H38 408	HEAT EXCHANGER			1		
10	G	R01 E55 221	FAN MOTOR		1	1		MF1
11	G	R01 E11 115	PROPELLER FAN		1	1		
12	G	R01 E08 097	NUT		1	1		
13	G	R01 H94 202	THERMISTOR (DISCHARGE, SHELL)		1	1		TH4,TH32
14	G	T92 263 124	COMPRESSOR	SNB092FGCM	1		Including RUBBER MOUNT	MC
	G	T97 418 607	COMPRESSOR	SNB130FGCM2		1	Including RUBBER MOUNT	MC
15	G	R01 E54 440	POWER RECEIVER		1	1		
16	G	R01 E26 410	STOP VALVE ASSY		1	1		
17	G	R01 E99 242	LEV COIL		1	1	CONNECTOR: RED	LEV-B
18	G	R01 H30 401	LEV		1	1	Including coil for LEV-B	
19	G	T7W E51 202	THERMISTOR (OUTDOOR PIPE)		1	1		TH33
20	G	T7W E62 242	SOLENOID COIL<4-WAY VALVE>		1	1		21S4
21	G	R01 N25 202	THERMISTOR (OUTDOOR PIPE)		1	1		TH3
22	G	R01 E98 242	LEV COIL		1	1	CONNECTOR: WHITE	LEV-A
23	G	T7W E28 401	LEV		1	1	Including coil for LEV-A	
24	G	R01 E24 413	CHARGE PLUG		1	1		
25	G	R01 E29 403	4-WAY VALVE		1	1		
26	G	R01 H83 202	THERMISTOR (OUTDOOR 2-PHASE PIPE, OUTDOOR)		1	1		TH6,TH7
27	G	R01 E06 208	HIGH PRESSURE SWITCH		1	1		63H
28	G	R01 E46 259	REACTOR		1	1		ACL
(29)	G	R01 E10 239	FUSE	250V 10A	2	2		F1,F2
(30)	G	R01 E15 239	FUSE	250V 3.15A	2	2		F3,F4
(31)	G	R01 E10 510	LEAD ASSY COMP		1			
	G	R01 E11 510	LEAD ASSY COMP			1		

RoHS PARTS LIST

FUNCTIONAL AND ELECTRICAL PARTS
PUHZ-ZRP60VHA
PUHZ-ZRP71VHA

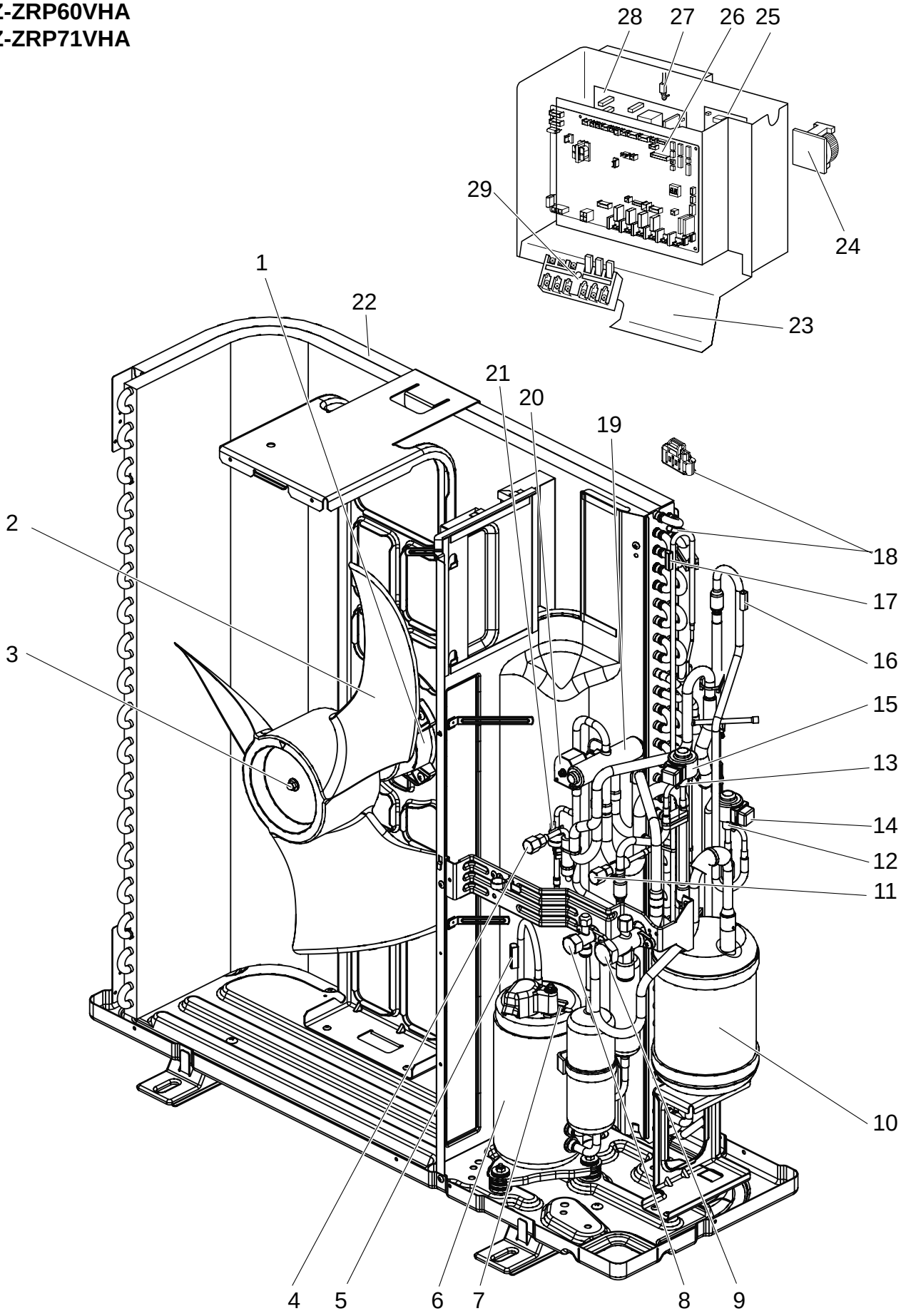

RoHS PARTS LIST

Part numbers that are circled are not shown in the figure.

No.	RoHS	Part No.	Part Name	Specification	Q'ty/unit		Remarks (Drawing No.)	Wiring Diagram Symbol
					PUHZ-ZRP·VHA			
					60	71		
1	G	R01 E57 221	FAN MOTOR		1	1		MF1
2	G	R01 E12 115	PROPELLER FAN		1	1		
3	G	R01 E09 097	NUT		1	1		
4	G	R01 E24 413	CHARGE PLUG		1	1		
5	G	T7W E17 201	THERMISTOR (DISCHARGE)		1	1		TH4
6	G	T92 263 125	COMPRESSOR	SNB130FGCM1	1		Including RUBBER MOUNT	MC
	G	T92 272 607	COMPRESSOR	SNB172FSHM1		1	Including RUBBER MOUNT	MC
7	G	T7W E11 201	THERMISTOR (SHELL)		1	1		TH32
8	G	R01 E25 410	STOP VALVE	3/8	1	1		
9	G	R01 E24 410	STOP VALVE	5/8	1	1		
10	G	R01 E62 440	POWER RECEIVER		1	1		
11	G	R01 E18 413	CHARGE PLUG		1	1		
12	G	T7W E29 401	LEV ASSY		1	1	Including coil for LEV-A	
13	G	R01 H40 401	LEV ASSY		1	1	Including coil for LEV-B & STV	
14	G	R01 H03 242	LEV COIL		1	1	CONNECTOR: WHITE	LEV-A
15	G	R01 H06 242	LEV COIL		1	1	CONNECTOR: RED	LEV-B
16	G	R01 H79 202	THERMISTOR (OUTDOOR PIPE)		1	1		TH33
17	G	R01 N03 202	THERMISTOR (OUTDOOR PIPE)		1	1		TH3
18	G	R01 E94 202	THERMISTOR (OUTDOOR 2PHASE PIPE, OUTDOOR)		1	1		TH6, 7
19	G	R01 E13 403	4-WAY VALVE		1	1		
20	G	T7W E39 242	SOLENOID COIL <4-WAY VALVE>		1	1		21S4
21	G	R01 E06 208	HIGH PRESSURE SWITCH		1	1		63H
22	G	R01 H40 408	HEAT EXCHANGER		1	1		
23	G	—	ELECTRICAL PARTS BOX		1	1	(BK00B055G77)	
24	G	R01 E33 259	REACTOR		1	1		ACL
25	G	T7W E21 346	NOISE FILTER CIRCUIT BOARD		1	1		N.F.
26	G	T7W F26 315	CONTROLLER CIRCUIT BOARD		1	1		C.B.
27	G	R01 E99 202	THERMISTOR (HEATSINK)		1	1		TH8
28	G	T7W E78 313	POWER CIRCUIT BOARD		1			P.B.
	G	T7W E81 313	POWER CIRCUIT BOARD			1		P.B.
29	G	T7W E29 716	TERMINAL BLOCK	6P (L,N,⏚,S1,S2,S3)	1	1		TB1
(30)	G	R01 E14 239	FUSE	250V 6.3A	4	4		F1,2,3,4
(31)	G	R01 E12 510	LEAD ASSY COMP		1	1		

RoHS PARTS LIST

FUNCTIONAL AND ELECTRICAL PARTS
PUHZ-ZRP100VKA
PUHZ-ZRP125VKA

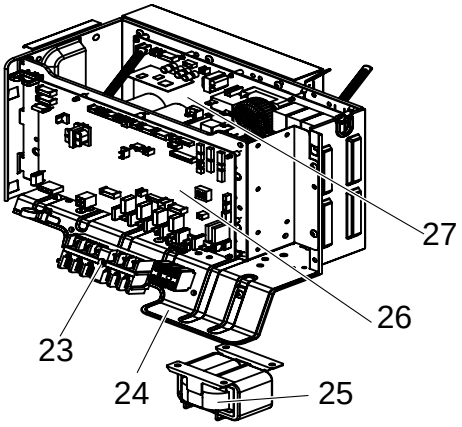

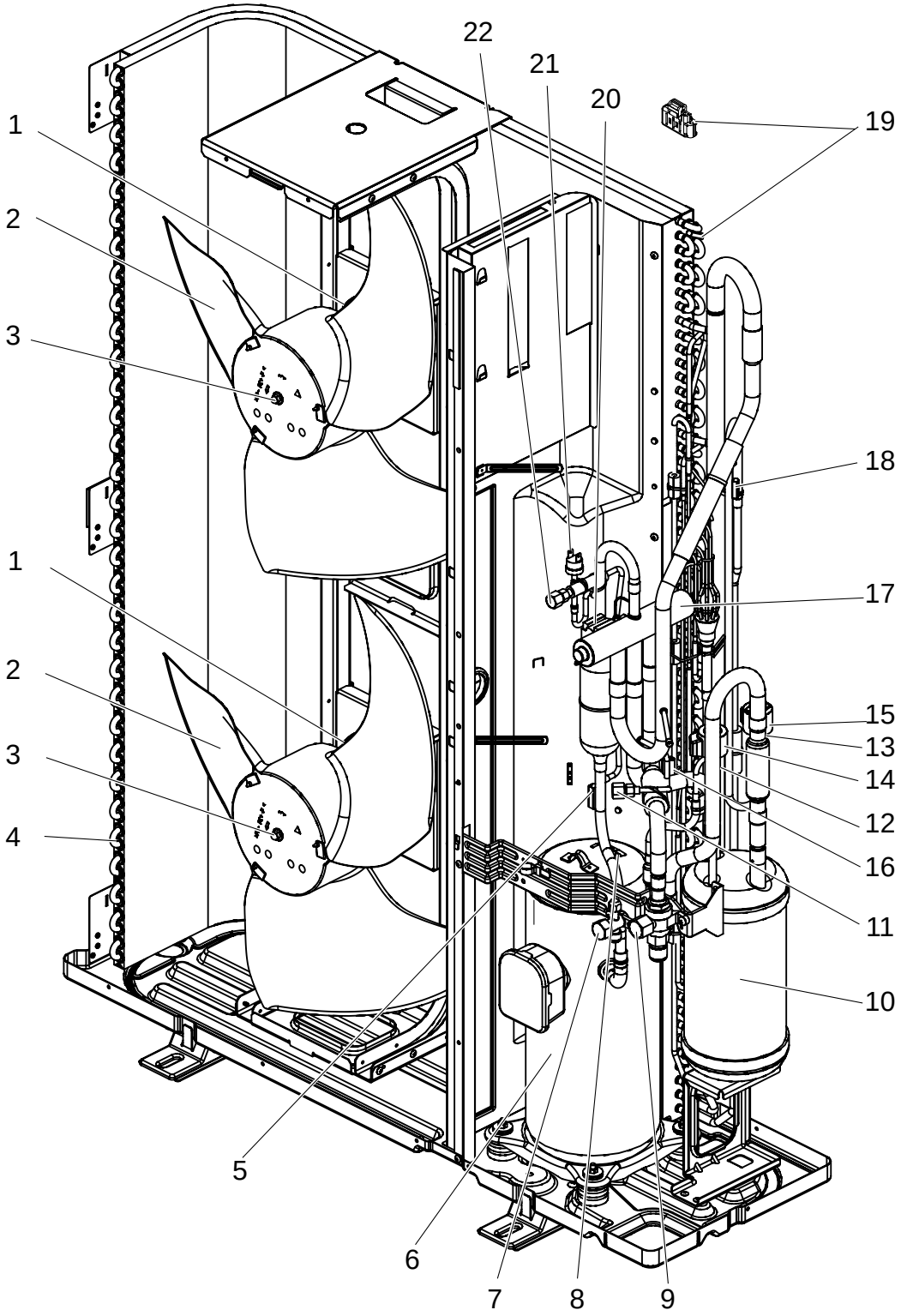

RoHS PARTS LIST

Part numbers that are circled are not shown in the figures.

No.	RoHS	Part No.	Part Name	Specification	Q'ty/unit	Remarks (Drawing No.)	Wiring Diagram Symbol
					PUHZ-ZRP100VKA PUHZ-ZRP125VKA		
1	G	R01 E50 221	FAN MOTOR		2		MF1,2
2	G	R01 E10 115	PROPELLER FAN		2		
3	G	R01 E09 097	NUT		2		
4	G	R01 H41 408	HEAT EXCHANGER		1		
5	G	T7W E04 201	THERMISTOR (DISCHARGE)		1		TH4
6	G	T97 424 077	COMPRESSOR	ANB33FNFMT	1	Including RUBBER MOUNTS	MC
7	G	R01 E25 410	STOP VALVE	3/8	1		
8	G	T7W E11 201	THERMISTOR (SHELL)		1		TH32
9	G	R01 E12 410	BALL VALVE	5/8	1		
10	G	R01 E60 440	POWER RECEIVER		1		
11	G	R01 E24 413	CHARGE PLUG		1		
12	G	R01 H41 401	LEV ASSY		1	Including coil for LEV-B & STV	
13	G	T7W E30 401	LEV ASSY		1	Including coil for LEV-A	
14	G	R01 E88 242	LEV COIL		1	CONNECTOR: RED	LEV-B
15	G	R01 E86 242	LEV COIL		1	CONNECTOR: WHITE	LEV-A
16	G	R01 H00 202	THERMISTOR (OUTDOOR PIPE)		1		TH3
17	G	R01 E15 403	4-WAY VALVE		1		
18	G	R01 H79 202	THERMISTOR (OUTDOOR PIPE)		1		TH33
19	G	R01 E94 202	THERMISTOR (OUTDOOR 2PHASE PIPE, OUTDOOR)		1		TH6,7
20	G	T7W E41 242	SOLENOID COIL <4-WAY VALVE>		1		21S4
21	G	R01 E06 208	HIGH PRESSURE SWITCH		1		63H
22	G	R01 E18 413	CHARGE PLUG		1		
23	G	T7W E29 716	TERMINAL BLOCK	6P (L,N,⏚,S1,S2,S3)	1		TB1
24	G	—	ELECTRICAL PARTS BOX		1	(BK00B055G94)	
25	G	T7W E20 259	REACTOR		1		DCL
26	G	T7W F27 315	CONTROLLER CIRCUIT BOARD		1		C.B.
27	G	T7W E82 313	POWER CIRCUIT BOARD		1		P.B.
(28)	G	R01 E14 239	FUSE	250V 6.3A	4		F1,2,3,4
(29)	G	R01 E20 254	MAIN SMOOTHING CAPACITOR		1		CB
(30)	G	R01 E13 510	LEAD ASSY COMP		1		

RoHS PARTS LIST

FUNCTIONAL AND ELECTRICAL PARTS
PUHZ-ZRP100YKA
PUHZ-ZRP125YKA
PUHZ-ZRP100YKAR1
PUHZ-ZRP125YKAR1

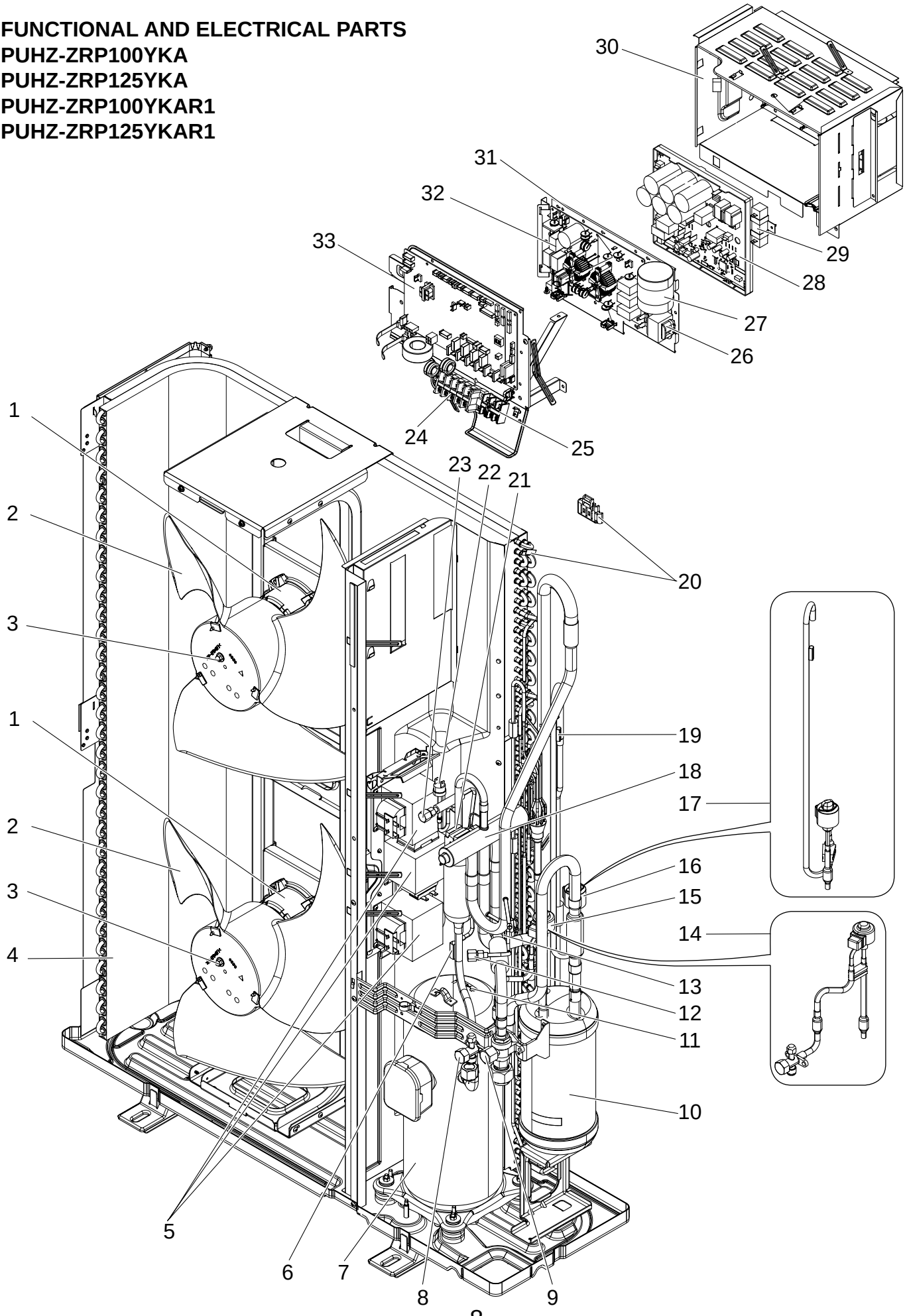

RoHS PARTS LIST

Part numbers that are circled are not shown in the figures.

No.	RoHS	Part No.	Part Name	Specification	Q'ty/unit				Remarks (Drawing No.)	Wiring Diagram Symbol
					PUHZ-ZRP					
					100	125	100	125		
					YKA		YKAR1			
1	G	R01 E50 221	FAN MOTOR		2	2	2	2		MF1,2
2	G	R01 E10 115	PROPELLER FAN		2	2	2	2		
3	G	R01 E09 097	NUT		2	2	2	2		
4	G	R01 H41 408	HEAT EXCHANGER		1	1	1	1		
5	G	T7W E21 259	REACTOR		3		3			ACL1,2,3
	G	T7W E22 259	REACTOR			3		3		ACL1,2,3
6	G	T7W E17 201	THERMISTOR (DISCHARGE)		1	1	1	1		TH4
7	G	T97 425 077	COMPRESSOR	ANB33FNCMT	1	1	1	1	Including RUBBER MOUNTS	MC
8	G	R01 E25 410	STOP VALVE	3/8	1	1	1	1		
9	G	R01 E12 410	BALL VALVE	5/8	1	1	1	1		
10	G	R01 E60 440	POWER RECEIVER		1	1	1	1		
11	G	T7W E11 201	THERMISTOR (SHELL)		1	1	1	1		TH32
12	G	R01 E24 413	CHARGE PLUG		1	1	1	1		
13	G	R01 H00 202	THERMISTOR (OUTDOOR PIPE)		1	1	1	1		TH3
14	G	R01 H42 401	LEV ASSY		1	1	1	1	Including coil for LEV-B & STV	
15	G	R01 E49 242	LEV COIL		1	1	1	1	CONNECTOR: RED	LEV-B
16	G	R01 E50 242	LEV COIL		1	1	1	1	CONNECTOR: WHITE	LEV-A
17	G	T7W E31 401	LEV ASSY		1	1	1	1	Including coil for LEV-A	
18	G	R01 E15 403	4-WAY VALVE		1	1	1	1		
19	G	R01 H79 202	THERMISTOR (OUTDOOR PIPE)		1	1	1	1		TH33
20	G	R01 H01 202	THERMISTOR (OUTDOOR 2PHASE PIPE, OUTDOOR)		1	1	1	1		TH6,7
21	G	T7W E41 242	SOLENOID COIL <4-WAY VALVE>		1	1	1	1		21S4
22	G	R01 E06 208	HIGH PRESUURE SWITCH		1	1	1	1		63H
23	G	R01 E18 413	CHARGE PLUG		1	1	1	1		
24	G	T7W E30 716	TERMINAL BLOCK	5P (L1,L2,L3,N,⏚)	1	1	1	1		TB1
25	G	R01 E19 246	TERMINAL BLOCK	3P (S1,S2,S3)	1	1	1	1		TB2
26	G	R01 E31 259	REACTOR		1	1	1	1		ACL4
27	G	T7W E10 254	CAPACITOR		1	1	1	1		CK
28	G	T7W A30 323	POWER CIRCUIT BOARD		1	1				P.B.
	G	T7W A40 323	POWER CIRCUIT BOARD				1	1		P.B.
29	G	R01 E10 233	RESISTOR		1	1	1	1		RS
30	G	—	ELECTRICAL PARTS BOX		1	1	1	1	(BK00C410G17)	
31	G	T7W E75 310	CONVERTER CIRCUIT BOARD		1	1	1	1		CONV.B.
32	G	T7W E28 346	NOISE FILTER CIRCUIT BOARD		1	1	1	1		N.F.
33	G	T7W F28 315	CONTROLLER CIRCUIT BOARD		1	1	1	1		C.B.
(34)	G	R01 E14 239	FUSE	250V 6.3A	4	4	4	4		F1,2,3,4
(35)	G	R01 H93 202	THERMISTOR (HEATSINK)		1	1	1	1		TH8
(36)	G	R01 E14 510	LEAD ASSY COMP		1	1	1	1		

RoHS PARTS LIST

FUNCTIONAL AND ELECTRICAL PARTS
PUHZ-ZRP140VKA

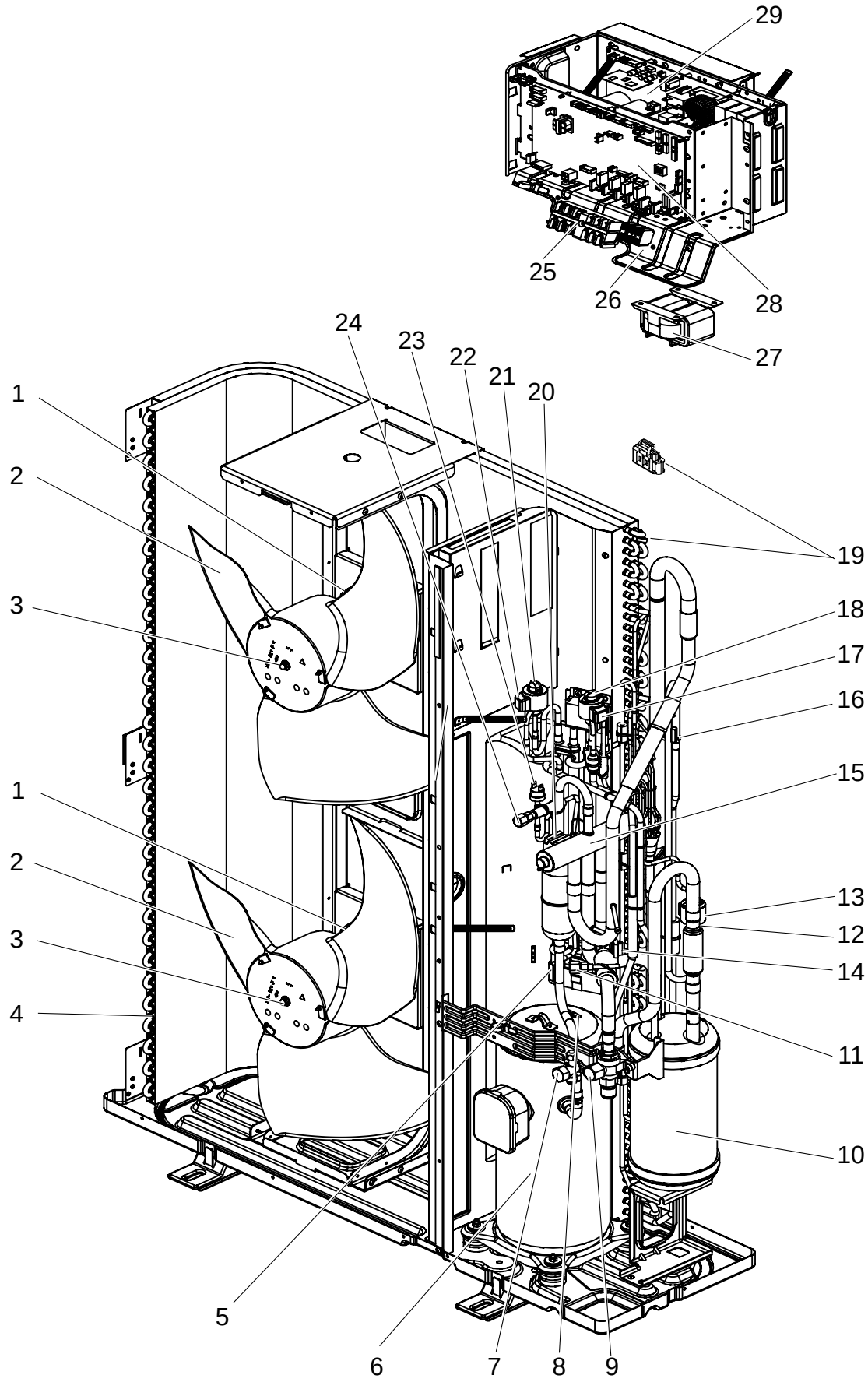

RoHS PARTS LIST

Part numbers that are circled are not shown in the figures.

No.	RoHS	Part No.	Part Name	Specification	Q'ty/unit	Remarks (Drawing No.)	Wiring Diagram Symbol
					PUHZ-ZRP140VKA		
1	G	R01 E50 221	FAN MOTOR		2		MF1,2
2	G	R01 E10 115	PROPELLER FAN		2		
3	G	R01 E09 097	NUT		2		
4	G	R01 H41 408	HEAT EXCHANGER		1		
5	G	T7W E04 201	THERMISTOR (DISCHARGE)		1		TH4
6	G	T97 424 077	COMPRESSOR	ANB33FNFMT	1	Including RUBBER MOUNTS	MC
7	G	R01 E25 410	STOP VALVE	3/8	1		
8	G	T7W E11 201	THERMISTOR (SHELL)		1		TH32
9	G	R01 E12 410	BALL VALVE	5/8	1		
10	G	R01 E60 440	POWER RECEIVER		1		
11	G	R01 E24 413	CHARGE PLUG		1		
12	G	T7W E30 401	LEV		1	Including coil for LEV-A	
13	G	R01 E86 242	LEV COIL		1	CONNECTOR: WHITE	LEV-A
14	G	R01 H00 202	THERMISTOR (OUTDOOR PIPE)		1		TH3
15	G	R01 E15 403	4-WAY VALVE		1		
16	G	R01 H79 202	THERMISTOR (OUTDOOR PIPE)		1		TH33
17	G	R01 E49 242	LEV COIL		1	CONNECTOR: RED	LEV-B
18	G	R01 H20 401	LEV		1	For LEV-B	
19	G	R01 E94 202	THERMISTOR (OUTDOOR 2PHASE PIPE, OUTDOOR)		1		TH6,7
20	G	T7W E41 242	SOLENOID COIL <4-WAY VALVE>		1		21S4
21	G	T7W E26 401	LEV		1	For LEV-C	
22	G	R01 E68 242	LEV COIL		1	CONNECTOR: BLUE	LEV-C
23	G	R01 E06 208	HIGH PRESSURE SWITCH		1		63H
24	G	R01 E18 413	CHARGE PLUG		1		
25	G	T7W E29 716	TERMINAL BLOCK	6P (L,N,⏚,S1,S2,S3)	1		TB1
26	G	—	ELECTRICAL PARTS BOX		1	(BK00B055G94)	
27	G	T7W E20 259	REACTOR		1		DCL
28	G	T7W F27 315	CONTROLLER CIRCUIT BOARD		1		C.B.
29	G	T7W E82 313	POWER CIRCUIT BOARD		1		P.B.
(30)	G	R01 E14 239	FUSE	250V 6.3A	4		F1,2,3,4
(31)	G	R01 E20 254	MAIN SMOOTHING CAPACITOR		1		CB
(32)	G	R01 E13 510	LEAD ASSY COMP		1		

RoHS PARTS LIST

FUNCTIONAL AND ELECTRICAL PARTS
PUHZ-ZRP140YKA
PUHZ-ZRP140YKAR1

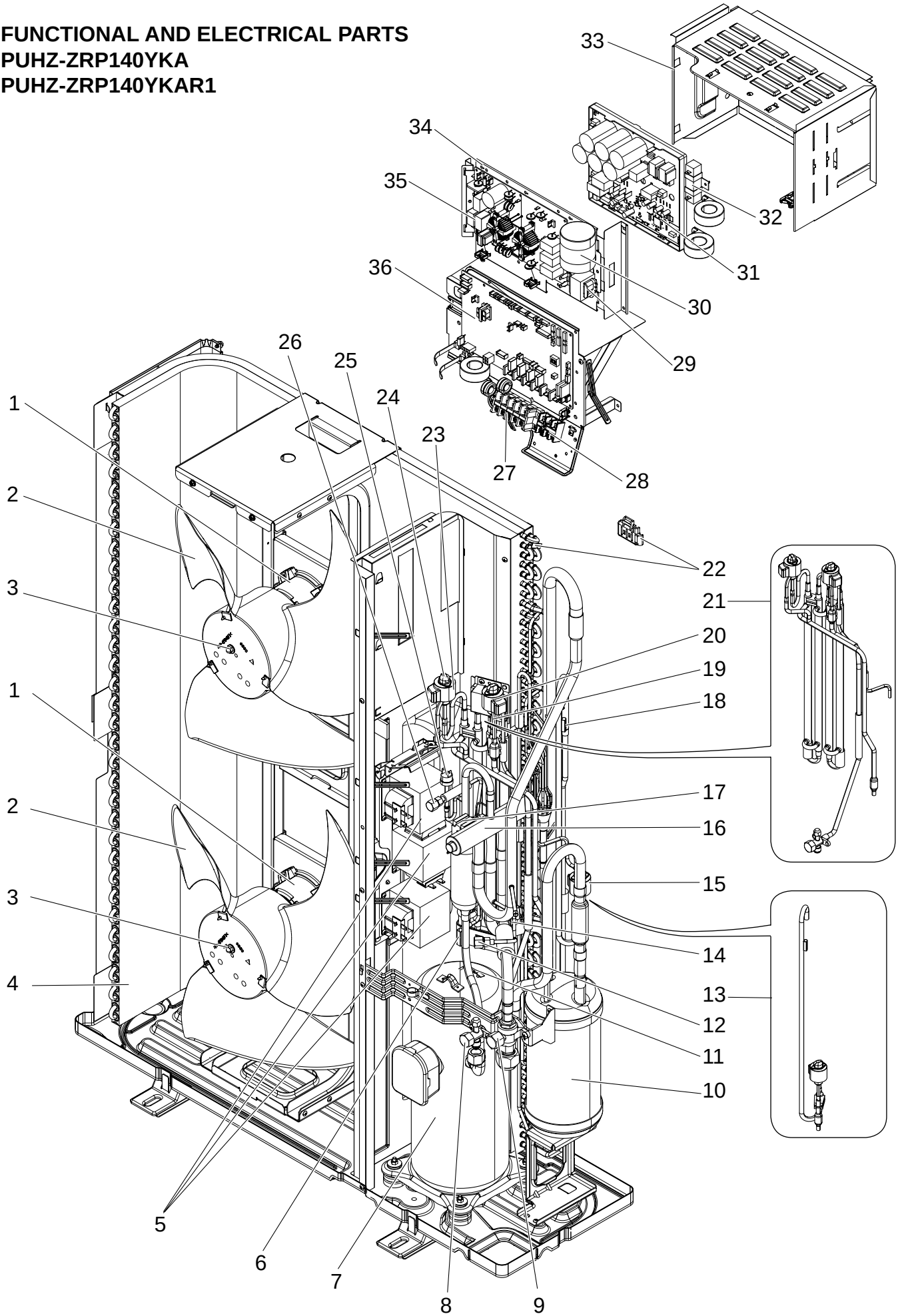

RoHS PARTS LIST

Part numbers that are circled are not shown in the figures.

No.	RoHS	Part No.	Part Name	Specification	Q'ty/unit		Remarks (Drawing No.)	Wiring Diagram Symbol
					PUHZ-ZRP140			
					YKA	YKAR1		
1	G	R01 E50 221	FAN MOTOR		2	2		MF1,2
2	G	R01 E10 115	PROPELLER FAN		2	2		
3	G	R01 E09 097	NUT		2	2		
4	G	R01 H41 408	HEAT EXCHANGER		1	1		
5	G	T7W E12 259	REACTOR		3	3		ACL1,2,3
6	G	T7W E17 201	THERMISTOR (DISCHARGE)		1	1		TH4
7	G	T97 425 077	COMPRESSOR	ANB33FNCMT	1	1	Including RUBBER MOUNTS	MC
8	G	R01 E25 410	STOP VALVE	3/8	1	1		
9	G	R01 E12 410	BALL VALVE	5/8	1	1		
10	G	R01 E60 440	POWER RECEIVER		1	1		
11	G	T7W E11 201	THERMISTOR (SHELL)		1	1		TH32
12	G	R01 E24 413	CHARGE PLUG		1	1		
13	G	T7W E31 401	LEV ASSY		1	1	Including coil for LEV-A	
14	G	R01 H00 202	THERMISTOR (OUTDOOR PIPE)		1	1		TH3
15	G	R01 E50 242	LEV COIL		1	1	CONNECTOR: WHITE	LEV-A
16	G	R01 E15 403	4-WAY VALVE		1	1		
17	G	T7W E41 242	SOLENOID COIL <4-WAY VALVE>		1	1		21S4
18	G	R01 H79 202	THERMISTOR (OUTDOOR PIPE)		1	1		TH33
19	G	R01 H20 401	LEV		1	1	For LEV-B	
20	G	R01 E49 242	LEV COIL		1	1	CONNECTOR: RED	LEV-B
21	G	T7W E37 401	LEV ASSY HIC		1	1	Including coil for LEV-B,C & STV	
22	G	R01 H01 202	THERMISTOR (OUTDOOR 2PHASE PIPE, OUTDOOR)		1	1		TH6,7
23	G	R01 E68 242	LEV COIL		1	1	CONNECTOR: BLUE	LEV-C
24	G	T7W E26 401	LEV		1	1	For LEV-C	
25	G	R01 E06 208	HIGH PRESSURE SWITCH		1	1		63H
26	G	R01 E18 413	CHARGE PLUG		1	1		
27	G	T7W E30 716	TERMINAL BLOCK	5P (L1,L2,L3,N,⏚)	1	1		TB1
28	G	R01 E19 246	TERMINAL BLOCK	3P (S1,S2,S3)	1	1		TB2
29	G	R01 E31 259	REACTOR		1	1		ACL4
30	G	T7W E10 254	CAPACITOR		1	1		CK
31	G	T7W A30 323	POWER CIRCUIT BOARD		1			P.B.
	G	T7W A40 323	POWER CIRCUIT BOARD			1		P.B.
32	G	R01 E10 233	RESISTOR		1	1		RS
33	G	—	ELECTRICAL PARTS BOX		1	1	(BK00C410G17)	
34	G	T7W E75 310	CONVERTER CIRCUIT BOARD		1	1		CONV.B.
35	G	T7W E28 346	NOISE FILTER CIRCUIT BOARD		1	1		N.F.
36	G	T7W F28 315	CONTROLLER CIRCUIT BOARD		1	1		C.B.
(37)	G	R01 E14 239	FUSE	250V 6.3A	4	4		F1,2,3,4
(38)	G	R01 H93 202	THERMISTOR (HEATSINK)		1	1		TH8
(39)	G	R01 E14 510	LEAD ASSY COMP		1	1		

RoHS PARTS LIST

STRUCTURAL PARTS
PUHZ-ZRP35VKA
PUHZ-ZRP50VKA

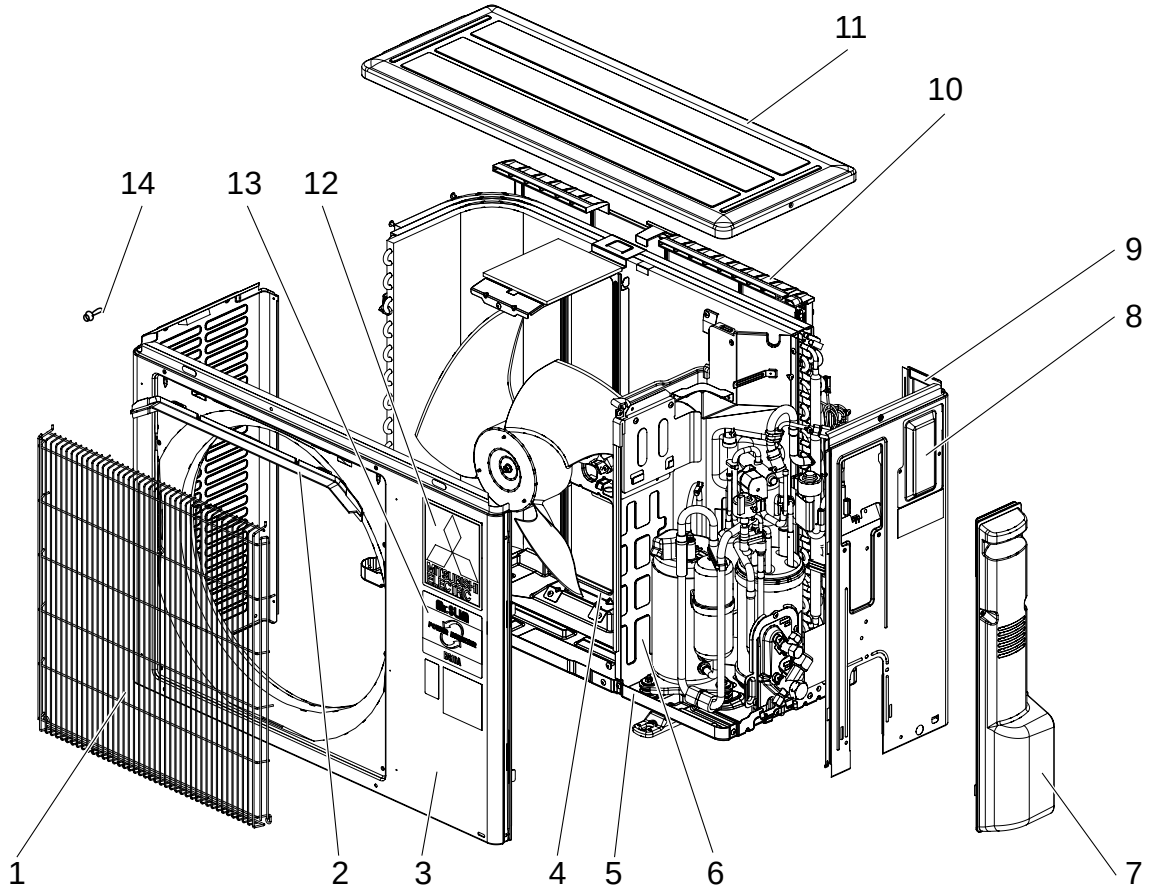

No.	RoHS	Part No.	Part Name	Specification	Q'ty/unit PUHZ-ZRP·VKA		Remarks (Drawing No.)	Wiring Diagram Symbol	Recommended Q'ty
					35	50			
1	G	R01 E61 691	GRILLE		1	1			
2	G	R01 E00 631	ICE GUARD		1	1			
3	G	R01 E21 668	FRONT PANEL		1	1			
4	G	R01 E45 130	MOTOR SUPPORT		1				
	G	R01 E46 130	MOTOR SUPPORT			1			
5	G	R01 E43 686	BESE ASSY		1	1			
6	G	—	SEPARATOR		1	1	(BK00J192G26)		
7	G	R01 E28 667	SERVICE PANEL		1	1			
8	G	R01 E03 633	SERVICE PLATE		1	1			
9	G	R01 E08 682	BACK PANEL		1	1			
10	G	R01 E04 684	REAR GUARD		1				
	G	R01 E05 684	REAR GUARD			1			
11	G	R01 E32 641	TOP PANEL		1	1			
12	G	—	LABEL (MITSUBISHI)		1	1	(DG79R130H03)		
13	G	—	BRAND LABEL		1	1	(BK79C208G02)		
14	G	—	TS.ST SCREW	(4×10)	17	17	(Z504K189H37)		

RoHS PARTS LIST

STRUCTURAL PARTS
PUHZ-ZRP60VHA
PUHZ-ZRP71VHA

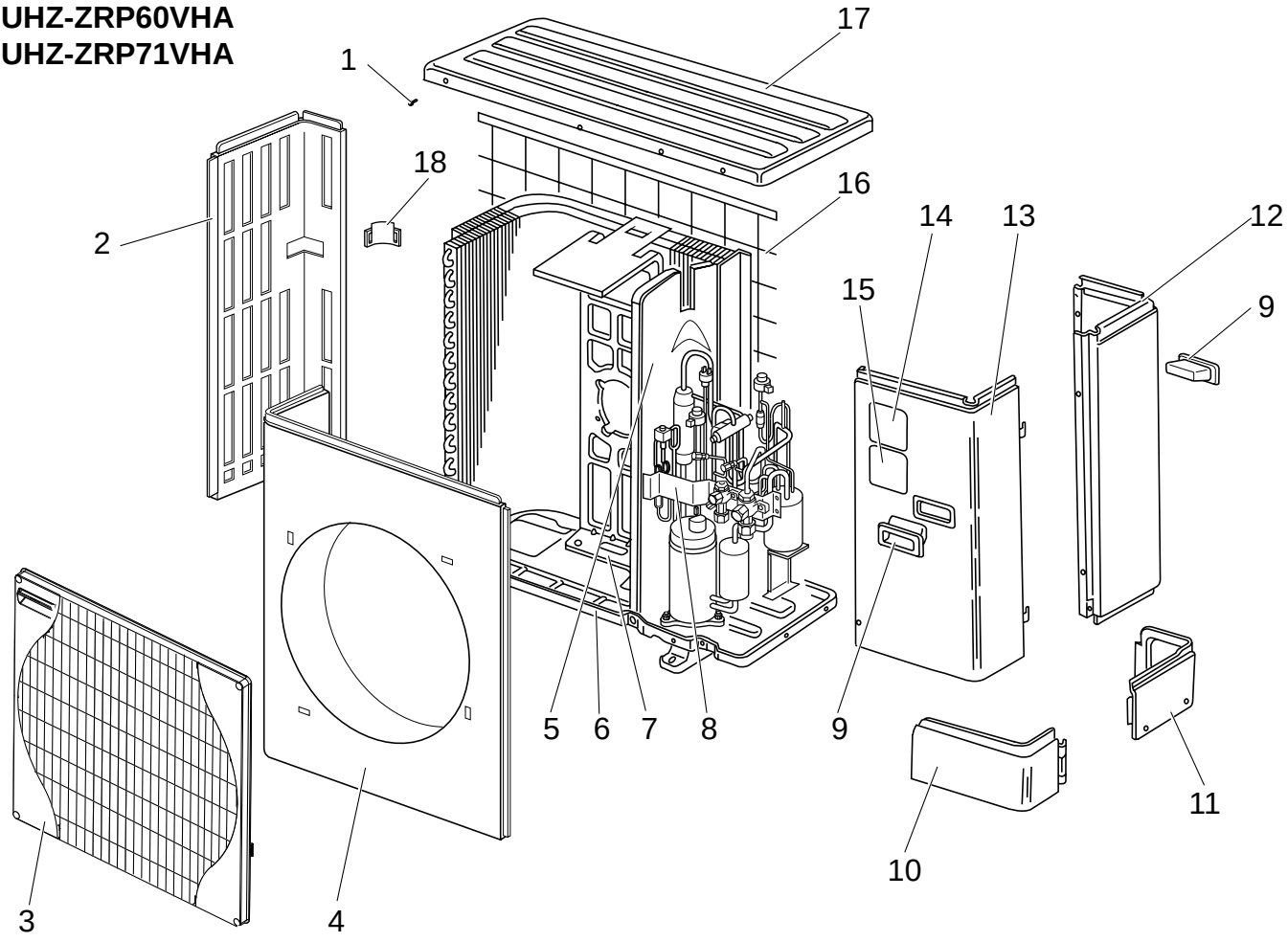

No.	RoHS	Part No.	Part Name	Specification	Q'ty/unit	Remarks (Drawing No.)	Wiring Diagram Symbol	Recommended Q'ty
					PUHZ-ZRP60VHA PUHZ-ZRP71VHA			
1	G	—	F.ST SCREW	(5×12)	31	(DG12F536H12)		
2	G	R01 E19 662	SIDE PANEL (L)		1			
3	G	R01 E33 691	FAN GRILLE		1			
4	G	R01 E15 668	FRONT PANEL		1			
5	G	—	SEPARATOR		1	(BK00C143GH4)		
6	G	R01 E44 686	BASE ASSY		1			
7	G	R01 E12 130	MOTOR SUPPORT		1			
8	G	—	VALVE BED ASSY		1	(BK00C375G06)		
9	G	R01 E01 655	HANDLE		2			
10	G	R01 E12 658	COVER PANEL (FRONT)		1			
11	G	R01 E24 658	COVER PANEL (REAR)		1			
12	G	R01 E40 661	SIDE PANEL (R)		1			
13	G	T7W E18 668	SERVICE PANEL		1			
14	G	—	LABEL (MITSUBISHI)		1	(DG79R130H03)		
15	G	—	LABEL (INVERTER)		1	(BK79C208G02)		
16	G	R01 E06 698	REAR GUARD		1			
17	G	R01 E29 641	TOP PANEL		1			
18	G	R01 E02 655	HANDLE		1			

RoHS PARTS LIST

STRUCTURAL PARTS
PUHZ-ZRP100VKA
PUHZ-ZRP125VKA
PUHZ-ZRP140VKA
PUHZ-ZRP100YKA
PUHZ-ZRP125YKA
PUHZ-ZRP140YKA

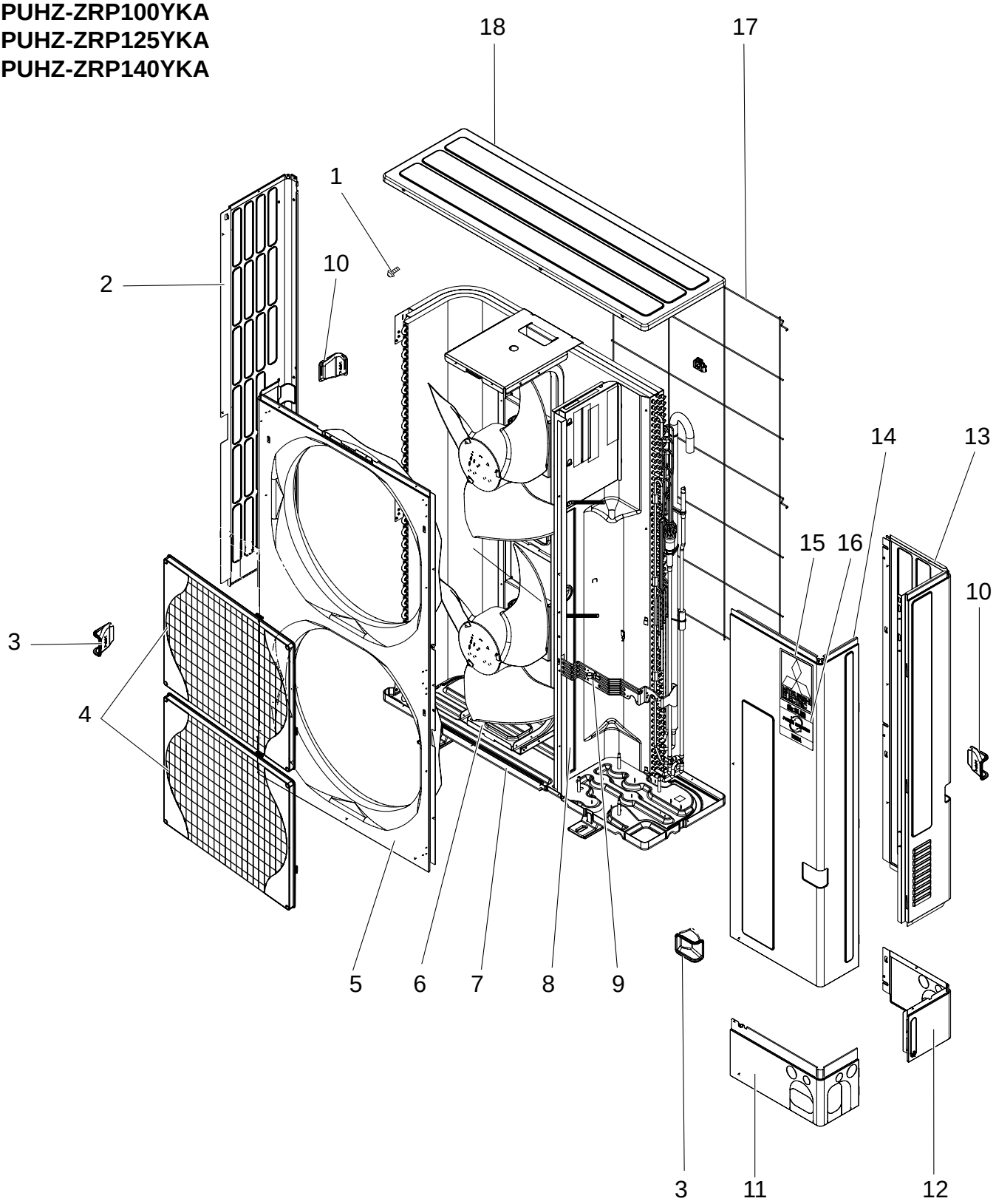

RoHS PARTS LIST

No.	RoHS	Part No.	Part Name	Specifi-cation	Q'ty/unit						Remarks (Drawing No.)	Wiring Diagram Symbol
					PUHZ-ZRP·KA							
					100V	125V	140V	100Y	125Y	140Y		
1	G	—	F.ST SCREW	(5×12)	38	38	38	38	38	38	(DG12F536H12)	
2	G	R01 E30 662	SIDE PANEL (L)		1	1	1	1	1	1		
3	G	R01 E04 655	HANDLE		2	2	2	2	2	2		
4	G	T7W E08 691	FAN GRILLE		2	2	2	2	2	2		
5	G	T7W E13 667	FRONT PANEL		1	1	1	1	1	1		
6	G	R01 E47 130	MOTOR SUPPORT		1	1	1	1	1	1		
7	G	R01 E45 686	BASE ASSY		1	1	1	1	1	1		
8	G	—	SEPARATOR		1	1					(BK00B817GC9)	
	G	—	SEPARATOR				1				(BK00B817GD1)	
	G	—	SEPARATOR					1	1		(BK00B817GC7)	
	G	—	SEPARATOR							1	(BK00B817GD0)	
9	G	—	VALVE BED ASSY		1	1	1	1	1	1	(BK00C375G07)	
10	G	R01 E03 655	HANDLE		2	2	2	2	2	2		
11	G	T7W E13 658	COVER PANEL (FRONT)		1	1	1	1	1	1		
12	G	R01 E34 658	COVER PANEL (REAR)		1	1	1	1	1	1		
13	G	R01 E55 661	SIDE PANEL (R)		1	1	1					
	G	T7W E28 661	SIDE PANEL (R)					1	1	1		
14	G	T7W E20 668	SERVICE PANEL		1	1	1	1	1	1		
15	G	—	LABEL (MITSUBISHI)		1	1	1	1	1	1	(DG79R130H03)	
16	G	—	LABEL (INVERTER)		1	1	1	1	1	1	(BK79C208G02)	
17	G	R01 E10 698	REAR GUARD		1	1	1	1	1	1		
18	G	R01 E33 641	TOP PANEL		1	1	1	1	1	1		

RoHS PARTS LIST

STRUCTURAL PARTS
PUHZ-ZRP100YKAR1
PUHZ-ZRP125YKAR1
PUHZ-ZRP140YKAR1

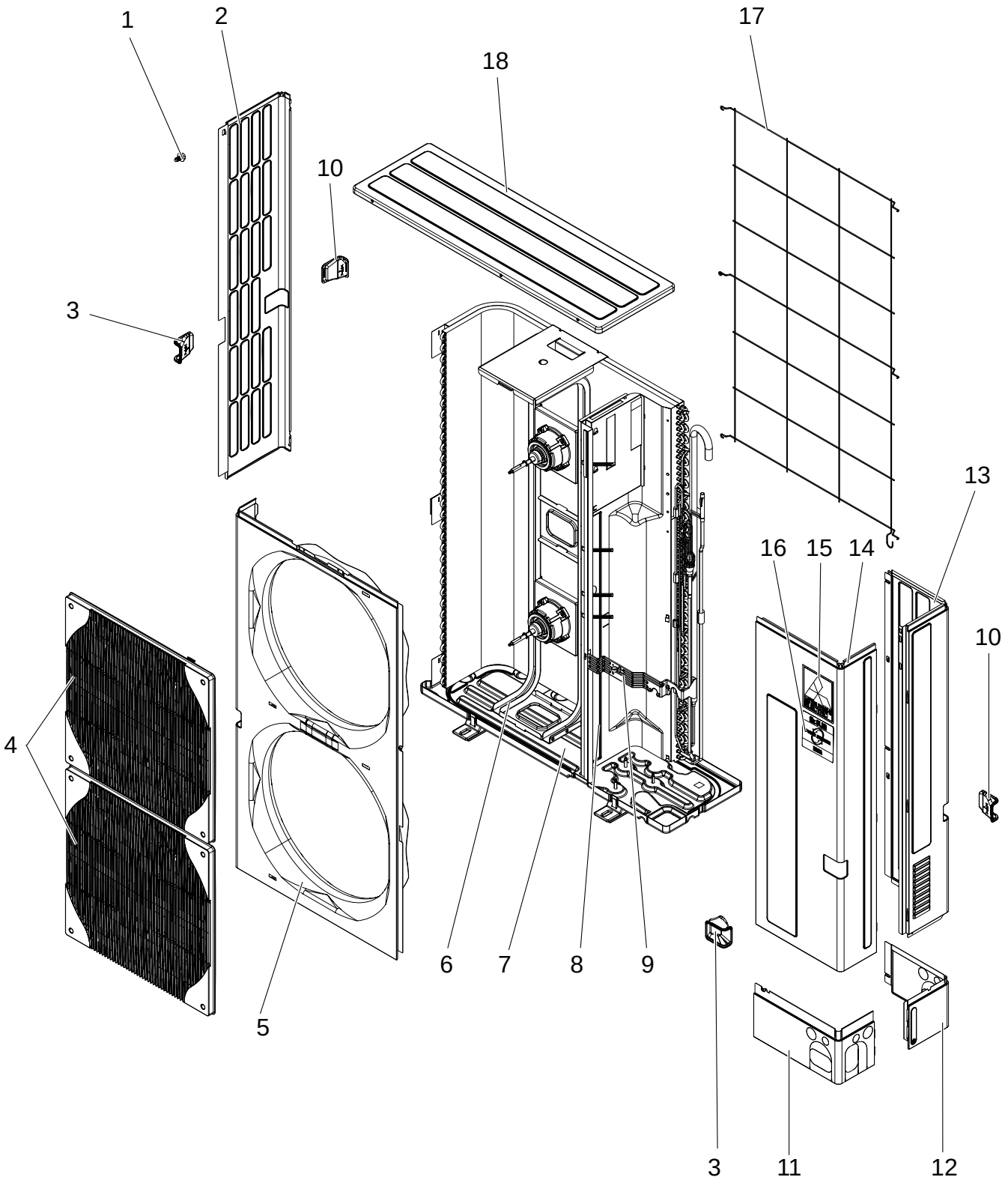

RoHS PARTS LIST

No.	RoHS	Part No.	Part Name	Specifi-cation	Q'ty/unit			Remarks (Drawing No.)	Wiring Diagram Symbol
					PUHZ-ZRP·KAR1				
					100Y	125Y	140Y		
1	G	—	F.ST SCREW	(5×12)	38	38	38	(DG12F536H12)	
2	G	R01 E30 662	SIDE PANEL (L)		1	1	1		
3	G	R01 E04 655	HANDLE		2	2	2		
4	G	T7W E08 691	FAN GRILLE		2	2	2		
5	G	T7W E13 667	FRONT PANEL		1	1	1		
6	G	R01 E47 130	MOTOR SUPPORT		1	1	1		
7	G	R01 E45 686	BASE ASSY		1	1	1		
8	G	—	SEPARATOR		1	1		(BK00B817GC7)	
	G	—	SEPARATOR				1	(BK00B817GD0)	
9	G	—	VALVE BED ASSY		1	1	1	(BK00C375G07)	
10	G	R01 E03 655	HANDLE		2	2	2		
11	G	T7W E13 658	COVER PANEL (FRONT)		1	1	1		
12	G	R01 E34 658	COVER PANEL (REAR)		1	1	1		
13	G	T7W E28 661	SIDE PANEL (R)		1	1	1		
14	G	T7W E20 668	SERVICE PANEL		1	1	1		
15	G	—	LABEL (MITSUBISHI)		1	1	1	(DG79R130H03)	
16	G	—	LABEL (INVERTER)		1	1	1	(BK79C208G02)	
17	G	R01 E10 698	REAR GUARD		1	1	1		
18	G	R01 E33 641	TOP PANEL		1	1	1		

Mr.SLIM™

MITSUBISHI ELECTRIC CORPORATION

HEAD OFFICE : TOKYO BLDG., 2-7-3, MARUNOUCHI, CHIYODA-KU, TOKYO 100-8310, JAPAN

©Copyright 2012 MITSUBISHI ELECTRIC CORPORATION
Distributed in Jul. 2013 No.OCB527 REVISED EDITION-A
Distributed in Nov. 2012 No.OCB527
Made in Japan

New publication, effective Jul. 2013
Specifications are subject to change without notice.